International Engineering Research Journal

Design and Comparative Analysis of Straight Fin and 8-Channel Staggered Profile Vertical Tower Cooler in Hydraulic Oil Cooler Applications

JayshriMadhukarSadgir,P.T.Kharat,R.K. Patil

#1Department of Mechanical Engineering.

PG student, TSSM'S PadmbhushanVasantdadaPatil Institute of Technology, Bavdhan, SavitribaiPhule Pune University, Pune, India

#2Professor, TSSM'S PadmbhushanVasantdadaPatil Institute of Technology, Bavdhan, SavitribaiPhule Pune University, Pune, India

#3Professor, TSSM'S PadmbhushanVasantdadaPatil Institute of Technology, Bavdhan, SavitribaiPhule Pune University, Pune, India

1jayshrisadgir@gmail.com,2pradip5872@gmail.com,3rkpvpit@gmail.com,

---

Abstract:

Hydraulic circuits are most commonly used power sources in industry. The progress in recent years has offered high efficiency and reliable hydraulic component, yet hydraulic cooling circuit design is often neglected part of the development. One aspect of the hydraulic circuit design is prevention of overheating of hydraulic oil. Letting oil temperature rise beyond particular limit can increase the power consumption reduce the life of a system due to poor lubrication, higher internal leakage, higher risk of cavitation and damage component. Keeping temperature down also help ensure the oil and other components last longer. Excess heat can degrade hydraulic oil, form harmful varnish on component surface and deteriorate rubber and elastomeric seal. Operating within recommended temperature ranges increases a hydraulic system availability and efficiency , improving equipment productivity. Finally , with more machine uptime and fewer shutdowns, it reduces service and repair costs. Considering the benefit of cooler offer, it's apparent that accurately sizing them is paramount concern for design engineers. Presently hydraulic oil cooler used is shell and tube type oil coolers with water as the cooling medium , this is extremely bulk and running cost is high hence it is needed to be replaced by another system that will be air cooled to make provision for lower space consumption and cost reduction. Two designs of fins were thought of namely the straight fin system with fins project outward in eight channels and the other design being anstraight fin system with fins project outward in eight channels

The equipment to be developed will be first modeled using Unigrafix Nx-8 and steady state thermal analysis will be done using Ansys workbench 16.0. The paper will also discuss the performance evaluation of the straight fin setup.

Keywords: hydraulic oil cooler,straight fin system with fins project outward in eight channels,8-channel staggered profile vertical tower cooler.

---

1. Introduction

Two types of heat exchanger are used to cool hydraulic oil:

1) Shell-and-tube.
2) Finned tube.

The shell-and-tube has a series of tubes inside a closed cylinder. The oil flows through the small tubes, and the fluid receiving the heat (typically water) flows around the small tubes. Routing of the oil can be done to produce a single pass (oil enters one end and exits the other end) or a double pass (oil

enters one end, makes a U-turn at the other end, and travels back to exit at the same end it entered).

A shell and tube heat exchanger is a class of heat exchanger designs.] It is the most common type of heat exchanger in oil refineries and other large chemical processes, and is suited for higher-pressure applications. As its name implies, this type of heat exchanger consists of a shell (a large pressure vessel) with a bundle of tubes inside it. One fluid runs through the tubes, and another fluid flows over the tubes (through the shell) to transfer heat between the two fluids. The set of tubes is called a tube bundle, and may be composed of several types of tubes: plain, longitudinally finned, etc.

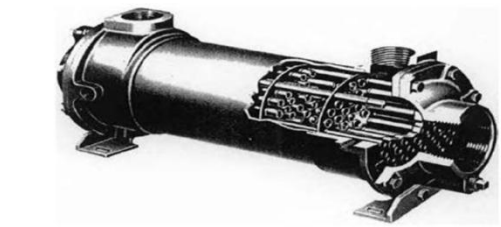

FIGURE 8.1
Shell-and-tube exchanger used to cool hydraulic oil. (Courtesy of Honeywell, Corona, CA.)

Fig. 1 Shell and Tube type heat exchanger

The finned tube exchanger is used for oil-to-air exchange. The air may be forced through the exchanger with a fan or may flow naturally. If an oil cooler is used on a mobile machine, it is the finned tube type.

Finned tube heat exchangers have tubes with extended outer surface area or fins to enhance the heat transfer rate from the additional area of fins. Finned tubes or tubes with extended outer surface area enhance the heat transfer rate by increasing the effective heat transfer area between the tubes and surrounding fluid. The fluid surrounding finned tubes maybe process fluid or air.

1.1 Types of Finned Tubes

1 Longitudinal Fins

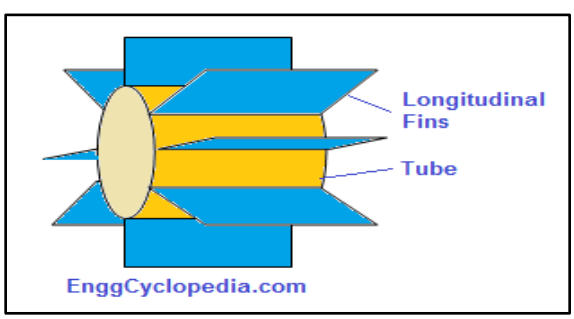

Fig. 2 - Longitudinally finned tube in heat exchanger

Longitudinal fins on a tube are best suited for applications where the flow outside the tubes is expected to be streamlined along the tube length, for example double pipe heat exchangers with highly viscous fluid outside the finned tube.

Longitudinal fins on a tube run along the length of the tubes. The cross sectional shapes of longitudinal fins can be either flat or tapered. For different cross sectional geometries, various correlations are available in the literature to evaluate the heat transfer coefficients on outer side of the tubes.

2 Transverse Fins

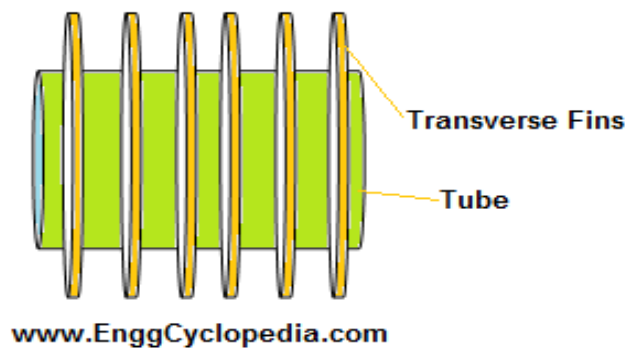

Fig. 3 - Transversely finned heat exchanger tube

Transverse fins are normally used for gas flows or turbulent flows and for cross flow type exchangers or shell and tube heat exchangers. For air coolers, tubes with transverse fins are best suited.

Transverse fins are hollow metal discs spaced from each other and fitted along the length of the finned tubes. The transverse fin discs can be flat or tapered. Heat transfer coefficients on the surface of the fin depend on the fin disc geometry and are available in the literature in the form of correlations.

2. Literature Review:

[1]Mark E. Steinke and Satish G. Kandlikar are performed the experimental work in Single Phase Liquid Heat Transfer in Plain and Enhanced Microchanels.

The development of advanced micro channel heat exchangers and microfluidic devices is dependent

upon the understanding of the fundamental heat transfer processes that occur in these systems. There have been great advancements in our understanding of the heat transfer and fluid flow mechanisms that occur in micro channels. There is several research areas in micro channel heat transfer that so promise for such applications as microprocessor cooling.

An enhanced micro channel heat exchanger (EMCHX) that uses single-phase liquid flows has been developed. This EMCHX uses flow obstructions to create a continually developing flow condition and the enhancement in heat transfer associated with that flow regime. A silicon substrate is chosen to create off-set strip fins in the micro channel flow field. Experimental verification of this new method shows excellent improvement in heat transfer over plain or traditional micro channels with straight, continuous walls. However, careful attention must be paid to the added pressure drop that is created by adding these obstructions.

A new micro channel parameter called pumping power flux is developed to aid in the comparison between plain and enhanced micro channels. The pumping power flux is used in conjunction with the heat flux to calculate a coefficient of performance to demonstrate the heat transfer enhancement. The enhanced micro channels provide a much higher COP for the same flow conditions. Therefore, the improved heat transfer provided outweighs the added pressure drop caused by the enhanced micro channels.

[2]Satish G. Kandlikar and William J. Grandeare performed the experimental work in Evolution of Micro channel Flow Passages – Thermo hydraulic Performance and Fabrication Technology.

This paper provides a roadmap of development in the thermal and fabrication aspects of micro channels as applied in the microelectronics and other high heat-flux cooling applications. Micro channels are defined as flow passages that have hydraulic diameters in the range of 10 to 200 micrometers. The impetus for micro channel research was provided by the pioneering work of Tuckerman and Pease at Stanford University in the early eighties. Since that time, this technology has received considerable attention in microelectronics and other major application areas, such as fuel cell systems and advanced heat sink designs. After reviewing the advancement in heat transfer technology from a historical perspective, advantages of using micro channels in high heat flux cooling applications is discussed, and research done on various aspects of micro channel heat exchanger performance is reviewed. Single-phase performance for liquids is expected to be still describable by the conventional equations; however the gas flow may be influenced by the rarefaction effects. Two-phase flow is another topic that is still under active research. The evolution of research into micro channel heat sinks has paralleled the advancements made in micro fabrication technology. The earliest micro channels were built using anisotropic wet chemical etching techniques based on alkali solutions. While this method has been exploited successfully, it does impose certain restrictions on silicon wafer type and geometry. Recently, anisotropic dry etching processes have been developed that circumvent these restrictions. In addition, dry etching methods can be significantly faster and, from a manufacturing standpoint, create fewer contamination and waste treatment problems. Advances in fabrication technology will continue to fuel improvements in micro channel heat sink performance and cost for the foreseeable future. Some fabrication areas that may spur advances include new materials, high aspect ratio patterning techniques other than dry etching, active fluid flow elements, and micro molding

[3]Haishan Cao, Guangwen Chen and Quan Yuanare performed the experimental work in Testing and Design of a Micro channel Heat Exchanger With Multiple Plates.

The micro heating system is one of the hard cores of a micro chemical system. In this paper, the performance of micro channel heat exchangers (MCHEs) with two plates made of stainless steel was investigated experimentally. The maximum volumetric heat transfer coefficient was up to 5.2 MW/m3 •K with a corresponding pressure drop of less than 20 kPa under a Reynolds number of around 65. The correlations of average Nusselt number and pressure drop to Reynolds number in micro channels were presented for designing MCHEs with multiple plates with the same geometric structure being researched, and the validity of correlations was verified through MCHEs with two plates and ten plates. Moreover, experimental results verified that MCHEs can be applied to recover energy in integrated microstructure systems of thermal and chemical processes via a system of ethanol dehydration to ethylene.

[4]Robert K. Lade Jr., Erik J. Hippchen, Luke Rodgers, Christopher W. Macosko, and Lorraine F. Francisare

performed the experimental work in Capillary-Driven Flow in Open Micro channels Printed with Fused Deposition Modeling.

The fundamentals of fluid flow in 3D printed, open micro channels created using fused deposition modeling (FDM) are explored. Printed micro channels are used in microfluidic devices and have potential applications in embedding electronics in plastic substrates. However, FDM parts possess rough surfaces, and in this study, surface topography is shown to have an important impact on flow behavior, causing the liquid to travel down the channel with a characteristic 'pulsing' movement. We also analyze the influence of print orientation on capillary flow, where micro channels printed in specific orientations are shown to exhibit different flow dynamics.

[5]Yanhui Hana, Yan Liua and Ming Liaa ,Jin Huanga are performed the experimental work in A review of development of micro-channel heat exchanger applied in air-conditioning system.

Micro-channel heat exchanger(MCHX) has been increasingly applied in HVAC&R(Heating, Ventilation, and Air Conditioning & Refrigeration) field due to its higher efficiently heat transfer rate, more compact structure, lower cost. The characteristics of micro-channel heat transfer and fluid dynamics are summarized in this paper. The methods about optimizations (i.e., geometry and thermodynamic performance) and the advantages and disadvantages of the MCHX are analyzed.

[6]Jang-Won Seo, Yoon-Ho Kim, Dongseon Kim, Young-Don Choi and Kyu-Jung Lee are performed the experimental work in Heat Transfer and Pressure Drop Characteristics in Straight Micro channel of Printed Circuit Heat Exchangers.

Performance tests were carried out for a micro channel printed circuit heat exchanger (PCHE), which was fabricated with micro photo-etching and diffusion bonding technologies. The micro channel PCHE was tested for Reynolds numbers in the range of 100–850 varying the hot-side inlet temperature between 40 °C–50 °C while keeping the cold-side temperature fixed at 20 °C. It was found that the average heat transfer rate and heat transfer performance of the counter current configuration were 6.8% and 10%–15% higher, respectively, than those of the parallel flow. The average heat transfer rate, heat transfer performance and pressure drop increased with increasing Reynolds number in all experiments. Increasing inlet temperature did not affect the heat transfer performance while it slightly decreased the pressure drop in the experimental range considered. Empirical correlations have been developed for the heat transfer coefficient and pressure drop factor as functions of the Reynolds number.

[7] Julian Marschewski, Raphael Brechbühler, Stefan Jung, Patrick Ruch and Bruno Michel ,Dimos Poulikakosare performed the experimental work in Significant heat transfer enhancement in micro channels with herringbone-inspired microstructures.

Herringbone microstructures are a very promising class of flow promoters to passively enhance heat transfer in micro channels by efficiently triggering helicoidal fluid motion. A host of applications are envisioned to benefit from heat transfer enhancement in micro channels, including microfluidic interlayer cooling of 3D electronic chip stacks, or advanced concepts of integrated cooling and electrochemical power delivery. Here we investigate the cooling performance of micro channels with such flow promoters and show that the Nusselt number reaches an average value of Nu = 36.6 at a Reynolds number of Re = 510 for our best performing design. This result constitutes a fourfold improvement in heat transfer capability compared to a plain micro channel. The fluid temperature is assessed optically using micron-resolution laser induced fluorescence (lLIF), while the wall temperature is measured with on-chip resistance thermometers. In addition, we determine the pressure drop originating from the presence of the herringbone flow promoters. By taking into account both the beneficial heat transfer enhancement and the adverse increase of pressure drop in a non-dimensional figure of merit (FoM), we demonstrate a significant performance enhancement of 220% at Re = 350 using herringbone structures for heat transfer augmentation compared to a plain, unstructured reference micro channel.

[8] Ngoctan Tran, Yaw-Jen Chang, Jyh-tong Teng and Thanhtrung Dangare performed the experimental work in Numerical and Experimental Investigations on Heat Transfer of Aluminum Micro channel Heat Sinks with Different Channel Depths.

In this study, heat transfer of aluminum micro channel heat sinks (MCHs) was investigated with both numerical and experimental methods. Five MCHs, each with twelve channels, were designed

with the channel width of 500 μm, channel length of 33 mm, and channel depths varying from 200 μm to 900 μm. Water was used as the working fluid and Reynolds numbers, as independent variables, were in the range of 100 to 1000. For all cases done in this study, it is found that the heat transfer of micro channel heat sinks was significantly affected by the channel depth. At mass flow rate of 213 g/min, when the channel depths increased from 200 μm to 900 μm, the heat fluxes decreased from 31.8 W/cm2 to 15.8 W/cm2 and the heat transfer rate increased from 113.3 W to 143.8 W. Good agreement between numerical and experimental results was achieved, with maximum percentage errors less than 6%.

3. Problem Statement:

Overheating ranks No. 2 in the list of most common problems with hydraulic equipment. Unlike leaks, which rank No. 1, the causes of overheating and its remedies are often not well understood by maintenance personnel.

Why do Hydraulic Systems Overheat?

Heating of hydraulic fluid in operation is caused by inefficiencies. Inefficiencies result in losses of input power, which are converted to heat. A hydraulic system's heat load is equal to the total power lost (PL) through inefficiencies and can be expressed as:

PLtotal = PLpump + PLvalves + PLplumbing + PLactuators

If the total input power lost to heat is greater than the heat dissipated, the hydraulic system will eventually overheat. Installed cooling capacity typically ranges between 25 and 40 percent of input power, depending on the type of hydraulic system.

Hydraulic Fluid Temperature

How hot is too hot? Hydraulic fluid temperatures above 180°F (82°C) damage most seal compounds and accelerate degradation of the oil. While the operation of any hydraulic system at temperatures above 180°F should be avoided, fluid temperature is too high when viscosity falls below the optimum value for the hydraulic system's components. This can occur well below 180°F, depending on the fluid's viscosity grade.

Maintaining Stable Hydraulic Fluid Temperature

To achieve stable fluid temperature, a hydraulic system's capacity to dissipate heat must exceed its heat load. For example, a system with continuous input power of 100 kW and an efficiency of 80 percent needs to be capable of dissipating a heat load of at least 20 kW. Assuming this system has a designed cooling capacity of 25 kW, anything that increases heat load above 25 kW or reduces the cooling system's capacity below 25 kW will cause the system to overheat.

Consider this example. I was recently asked to investigate and solve an overheating problem in a mobile application. The hydraulic system was comprised of a diesel-hydraulic power unit, which was being used to power a pipe-cutting saw. The saw was designed for sub-sea use and was connected to the hydraulic power unit on the surface via a 710-foot umbilical. The operating requirements for the saw were 24 GPM at 3,000 PSI.

The hydraulic power unit had a continuous power rating of 37 kW and was fitted with an air-blast heat exchanger. The exchanger was capable of dissipating 10 kW of heat under ambient conditions or 27 percent of available input power (10/37 x 100 = 27). The performance of all cooling circuit components were checked and found to be operating within design limits.

At this point it, was clear that the overheating problem was being caused by excessive heat load. Concerned about the length of the umbilical, I calculated its pressure drop. The theoretical pressure drop across 710 feet of ¾-inch pressure hose at 24 GPM is 800 PSI. The pressure drop across the same length of 1-inch return hose is 200 PSI. The theoretical heat load produced by the pressure drop across the umbilical of 1,000 PSI (800 + 200 = 1,000) was 10.35 kW. This meant that the heat load of the umbilical was 0.35 kW more than the heat dissipation capacity of the hydraulic system's heat exchanger. This, when combined with the system's normal heat load (inefficiencies) was causing the hydraulic system to overheat.

Methods to solve overheating problems
There are two ways to solve overheating problems in hydraulic systems: decrease heat load or increase heat dissipation.

Hydraulic systems dissipate heat through the reservoir. Therefore, check the reservoir fluid level and if low, fill to the correct level. Check that there

are no obstructions to airflow around the reservoir, such as a buildup of dirt or debris.

Inspect the heat exchanger and ensure that the core is not blocked. The ability of the heat exchanger to dissipate heat is dependent on the flow-rate and temperature of both the hydraulic fluid and the cooling air or water circulating through the exchanger. Check the performance of all cooling circuit components and replace as necessary.

An infrared thermometer can be used to check the performance of a heat exchanger, provided the design flow-rate of hydraulic fluid through the exchanger is known. To do this, measure the temperature of the oil entering and exiting the exchanger and substitute the values in the following formula:

$$\frac{kW = L/min \times \Delta T\ ^{o}C}{34.5}$$

Where: kW = heat dissipation of exchanger in kilowatts

L/min = oil flow through the exchanger in liters per minute

ΔT ºC = inlet oil temperature minus outlet oil temperature in Celsius.

Motivation

Previously Used System:

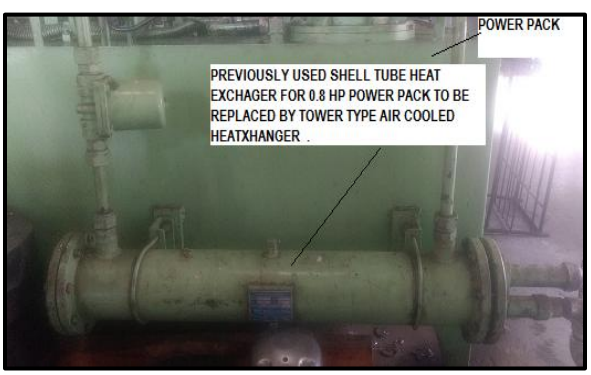

Fig 4 photo of Previously Used System

The above system is to be replaced by another compact system that will be air cooled using fan and the design will be of tower cooler type where we will be developing a single unit prototype with two profile designs for comparison purpose. The design under consideration is described below.

4. Objective :

a. Design and development of straight fin type profile vertical tower cooler in hydraulic oil cooler.
b. Design and development of 8-channel staggered profile vertical tower cooler in hydraulic oil cooler.
c. Thermal analysis of straight fin and 8-channel staggered profile vertical tower cooler in hydraulic oil cooler using ANSYS
d. Comparative experimental study and validation of straight fin and 8-channel staggered profile vertical tower cooler in hydraulic oil cooler as to the following parameters :
   a) Overall Heat transfer coefficient.
   b) Heat extraction ability (watt/min)
   c)Obstruction to air channel flow (mm of water column)
5. Plot comparative graphs of above parameters under various conditions

5. Design Methodology :

1. Design of straight fin and 8-channel staggered profile vertical tower cooler in hydraulic oil cooler system to remove the desired heat load.2-d drawing preparation of linkage mechanism by ' kinematic overlay method ' using Auto-Cad .
2. Development of 3-D model of system of oblique - staggered FDM fin holder using Unigraphix NX-8 , Preparation of STL file for model 3-D printing
3. Mechanical design of above components using theoretical theories of failure after selection of appropriate materials
4. 3-D modeling of set-up using Unigraphix Nx-8.0
5. CAE of critical component and meshing using Ansys i.e. the preprocessing part.
6. Thermal design validation using ANSYS ...critical components of the system will be designed and validated.

6. Experimental Setup:

Fig 5 Photographic Image of Experimental Setup

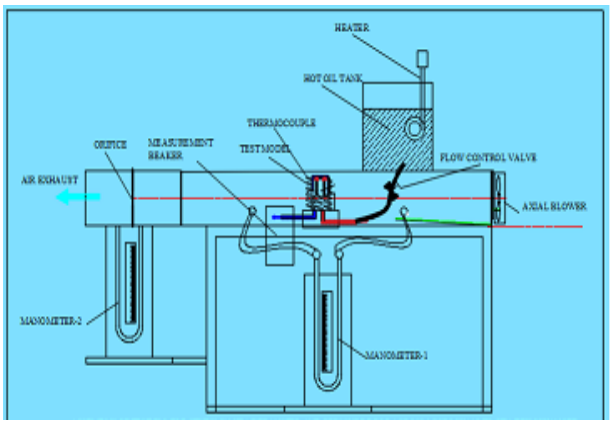

Fig 6 Block Diagram of Experimental Setup

7. Procedure of trial:

1. Heat oil in the top tank up to desired temperature.
2. Heat oil up to given temperature range.
3. Start oil flow from system at a specific flow rate by adjusting electronic speed regulator.
4. Start blower fans.
5. Take mass flow readings for hot oil and also not temperature gradient.
6. Take temperature reading of air.

Design and analysis of plain straight geometry tower fin cooler:

Fig 7 Photographic Image

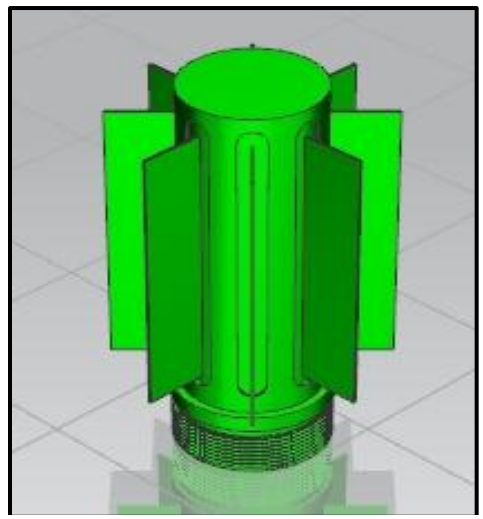

Fig 8 3 D Model

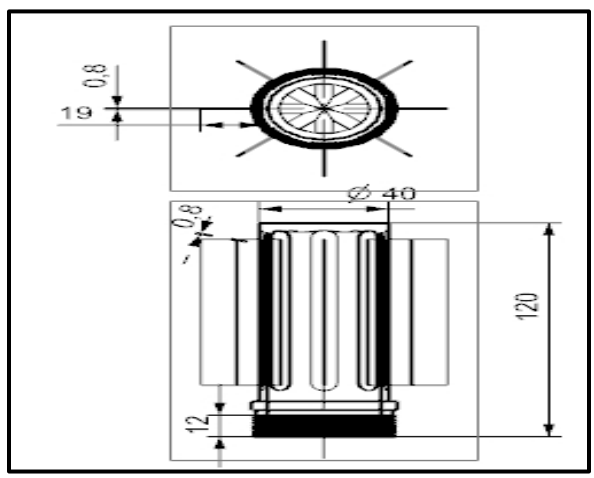

Fig 9 2 DModel

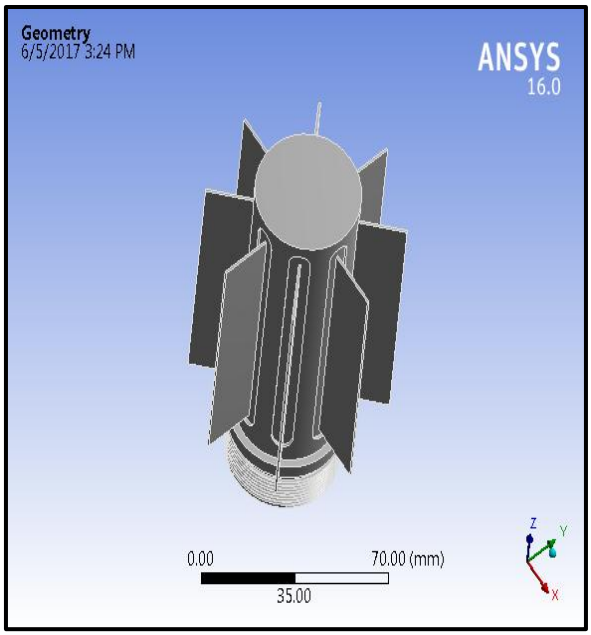

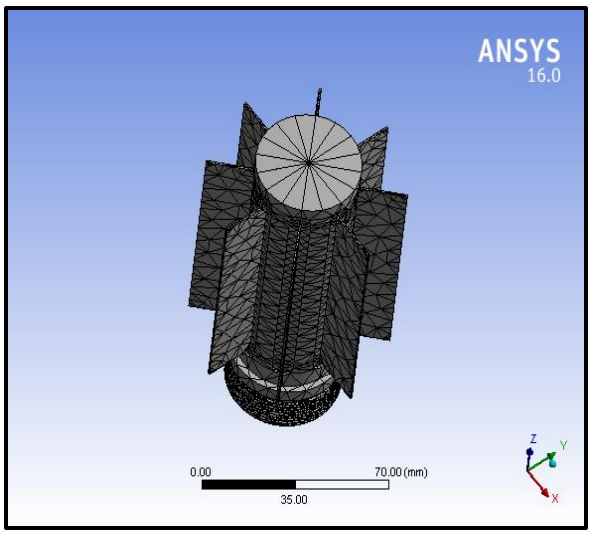

Statistics	
Nodes	41034
Elements	22403
Mesh Metric	None

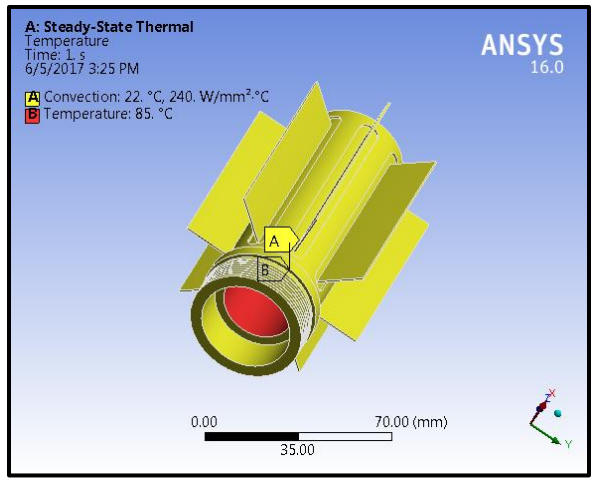

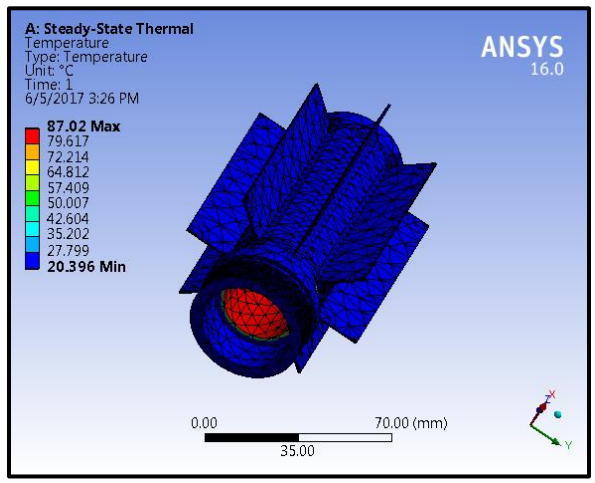

Fig 10 The above figure shows the details of temperature distribution in the tower cooler.

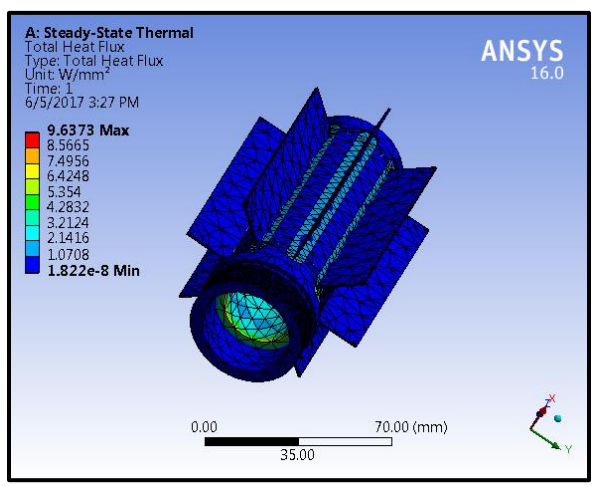

Fig 11 Maximum heat flux is 9.6 watt

8. Test and trial on plain straight tower cooler:

Input data
Oil (hot fluid) data
SAE 20 W 40
Specific gravity = 0.913
Specific heat = 0.406 Btu/lb-f =1.7KJ/KgK
Note:
1 KJ/KgK = 0.2389 Kcal/Kg oC =0.2389 Btu/ lbmoF
Hence
Specific heat of SAE20W40 = 0.406*1/0.2389 = 1.6999 = 1.7 KJ/KgK
Specific heatof air at (25 to 30 oC) = 1.005 KJ/Kg-K.
Area of individual fins = 89656.000mm^2
Total effective area = individual area * 3 = 0.268 m^2

9. Observation Table

A) Mass flow hot oil

Sr. No.	Volume in beaker	Time (sec)	Mass flow (Kg/sec)
1.	200	35	0.0052
2.	200	30	0.00584
3.	200	25	0.007
4.	200	20	0.0087
5.	200	15	0.0116

B) Mass flow rate of air :

Specificationsoffan : 108 cfm
Now, 1 kg /hr = 0.408cfm thus , 1 cfm =2.45 kg/hr
Thus mass flow rate of air = 108 x 2.45 =264.6 kg/hr =0.074 kg/sec

C) Temperature readings

a. For Cold Air

Sr.No.	Cold air inlet temp. (Tci)	Cold air outlet temp.(Tco)	ΔT air
1.	28	7	8
2.	28	8	10
3.	28	10	7
4.	28	13	10
5.	28	16	11

b. For Hot Air

Sr.No.	Hot oil inlet temp. (Thi)	Hot oil outlet temp. (The)	ΔT oil
1.	90	66	24
2.	89	63	26
3.	90	60	30
4.	88	56	32
5.	91	51	40

Result Table:

Sr No.	mCp⍰T (oil)	mCp⍰T (air)	LMTD
1.	0.21216	4.61094	44.72355
2.	0.258128	4.53657	41.7159
3.	0.357	4.61094	38.60661
4.	0.47328	4.4622	32.46064
5.	0.7888	4.68531	25.4867

Sr No.	Capacity Ratio	Effectiveness	U W/ m²k
1.	0.046012	0.387096774	307.2321
2.	0.056899	0.426229508	264.4922
3.	0.077425	0.483870968	215.0625
4.	0.106064	0.533333333	160.0962
5.	0.168356	0.634920635	136.582

10 . Graph:

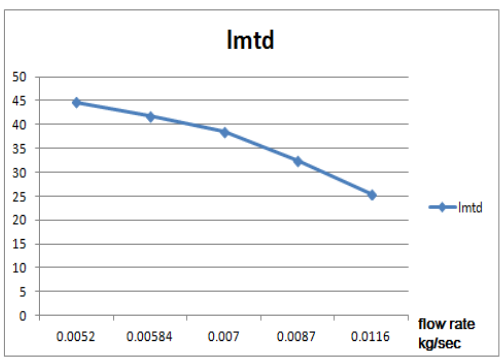

LMTD decreases with decrease in flow rate

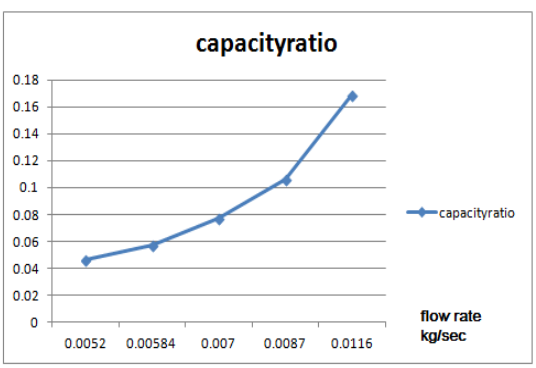

Capacity ratio increases with increase in flow rate

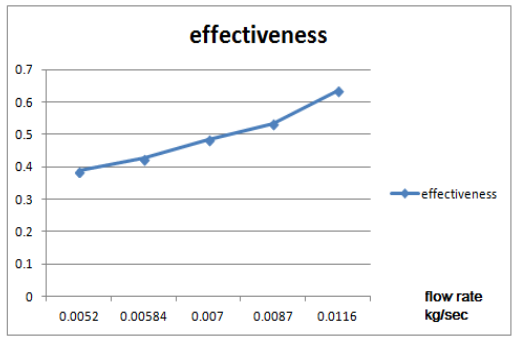

Effectiveness improves with increase in flow rate

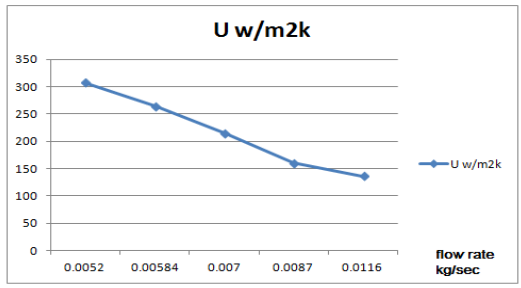

Overall heat transfer coeff reduces with increase in Flow rate

11. Conclusion in Case of Straight Fin Vertical Tower Cooler:

1. Maximum heat flux is 9.6 watt
2. LMTD decreases with decrease in flow rate
3. Overall heat transfer coeff reduces with increase in Flow rate
4. Effectiveness improves with increase in flow rate.

12. Future Work

To compare 8-Channel Staggered Profile Vertical Tower Cooler with staight fin geometry same procedure will be adopted.

Fig 12 3 d model of straight fin geometry

13. References:

[1] Mark E. SteinkeandSatish G. Kandlikar,"Single Phase Liquid Heat TransferinPlainandEnhanced Microchanels." *June 19-21,2006,Limerick,Ireland.* ICNMM2006-96227

[2] Satish G. Kandlikar and William J. Grande "Evolution of Microchannel Flow Passages – Thermohydraulic Performance and Fabrication Technology."

[3] Haishan Cao, Guangwen Chen and Quan Yuan "Testing and Design of a Microchannel Heat Exchanger With Multiple Plates." *Ind. Eng. Chem. Res.* **2009,** *48,* 4535–4541

[4] Robert K. Lade Jr., Erik J. Hippchen, Luke Rodgers, Christopher W. Macosko, and Lorraine F. Francis "Capillary-Driven Flow in Open Microchannels Printed with Fused Deposition Modeling."

[5] Yanhui Hana, Yan Liua and Ming Liaa, Jin Huanga "A review of development of micro-channel heat exchangerapplied in air-conditioning system." *Energy Procedia* 14 (2012) 148 – 153

[6] Jang-Won Seo, Yoon-Ho Kim, Dongseon Kim, Young-Don Choi and Kyu-Jung Lee "Heat Transfer and Pressure Drop Characteristics in Straight Microchannel of Printed Circuit Heat Exchangers."*Entropy* 2015, 17, 3438-3457; doi:10.3390/e17053438

[7] Julian Marschewski, Raphael Brechbühler, Stefan Jung, Patrick Ruch and Bruno Michel ,Dimos Poulikakos "Significant heat transfer enhancement in microchannels with herringbone-inspired microstructures." *International Journal of Heat and Mass Transfer* 95 (2016) 755–764

[8] Ngoctan Tran, Yaw-Jen Chang, Jyh-tong Teng and Thanhtrung Dang, "Numerical and Experimental Investigations on Heat Transfer of Aluminum Microchannel Heat Sinks with Different Channel Depths." *International Journal of Mechanical Engineering and Robotics Research Vol. 4, No. 3*, July 2015